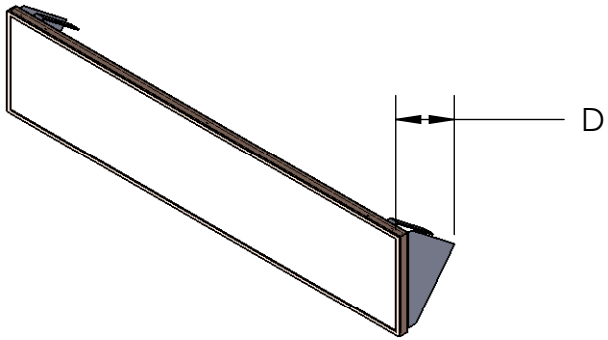

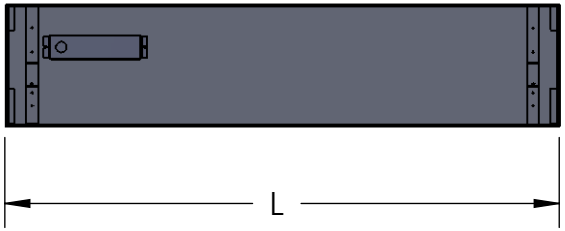

Cove Model	Watts	L	H	W	D
632C	585	33"	7"	1.125"	5.5"
645C	825	46"	7"	1.125"	5.5"
945C	1000	46"	10"	1.125"	7.5"
1445C	1500	46"	15"	1.125"	10"

PROPRIETARY AND CONFIDENTIAL

THE INFORMATION CONTAINED IN THIS DRAWING IS THE SOLE PROPERTY OF RADIANT ELECTRIC HEAT, LLC. ANY REPRODUCTION IN PART OR AS A WHOLE WITHOUT THE WRITTEN PERMISSION OF RADIANT ELECTRIC HEAT, LLC IS PROHIBITED.

Radiant Electric Heat

UNLESS OTHERWISE SPECIFIED:

DIMENSIONS ARE IN INCHES
TOLERANCES:
FRACTIONAL ±
ANGULAR: MACH ± BEND ±
TWO PLACE DECIMAL ±
THREE PLACE DECIMAL ±

INTERPRET GEOMETRIC TOLERANCE PER:

MATERIAL

FINISH

DO NOT SCALE DRAWING

	NAME	DATE
DRAWN	MAB	11/07/09
CHECKED	DMA	11/07/09
ENG APPR.		
MFG APPR.		
Q.A.		

COMMENTS:

Radiant Electric Heat

TITLE: Cove Radiant Heaters

SIZE A | DWG. NO. | REV A

SCALE: NA | SHEET 1 OF 1

5 4 3 2 1